LEADER
PROUDLY AUSTRALIAN

JULY - SEPTEMBER 2025

TAKE ADVANTAGE - UPGRADE YOUR IT TODAY!

TAX RETURN DEALS

LEADER
Breeze SCE4-B2

SCE4-B2-C4P

- 14" Full HD (1920x1080)
- Intel® Celeron® Processor
- 1.4kg
- LED Light Bar
- Fingerprint
- Windows 11 Pro

100% AUSTRALIAN OWNED & OPERATED
LEADER
CUSTOMISE TO SUIT YOUR NEEDS
2 YR WARRANTY & LOCAL SUPPORT

intel CELERON
Windows 11

$499

14"	4GB	128GB	1 Year
Full HD	DDR4	eMMC	RTB Warranty

LEADER
2-in-1 Tablet 10W5PRO

TBL-10W5PRO

- 10.5" Full HD Touch
- Intel® Celeron® Processor N4020
- Fingerprint Reader
- Detachable hard 6-row keyboard
- Active Pen Included
- Windows 11 Pro

intel CELERON
Windows 11

10.5"	4GB	128GB	1 Year
Full HD Touch	LPDDR4	eMMC	Australia Wide Onsite Warranty

$549

LEADER
Corporate N15-i5 mini-PC

SN15-i516

- Intel® Core™ i5-13500H
- Intel® Iris® Xe Graphics
- MIL-STD-810H Military-grade Durability
- VESA mount
- Windows 11 Pro

intel core i5
intel iRIS Xe GRAPHICS
Windows 11

i5	16GB	500GB	3 Year
13500H	DDR5	M.2 NVMe SSD	"4 Hour" Onsite Warranty

$1,499

LEADER Copilot+PC
AI Companion Copilot+ PC SCP6-C1

SCP6-C1-A7H

- 16" Full HD+
- AMD Ryzen AI 7 350
- AMD Radeon ™ Graphics
- White Color Backlight Keyboard
- Windows 11 Home
- **Upgrade to Windows 11 Pro for $99**

MIL-STD 810G DURABILITY TESTS
AMD RYZEN AI 7
RADEON GRAPHICS
Windows 11

16"	A7	16GB	1TB
Full HD+	350	DDR5	M.2 NVMe SSD

$2,049

RESISTANCE
Striker R55-15 V1 Gaming Notebook

SRS-R55-15V1

- Intel® Core™ i7-14650HX Processor
- NVIDIA® Geforce RTX™ 5050 8GB GDDR6
- Intel® Wi-Fi 7 Connectivity
- Multi Colour Backlit Keyboard
- Windows 11 Home

intel core i7
NVIDIA GEFORCE RTX
Windows 11

15.6"	i7	16GB	1TB
Full HD	14650HX	DDR5	M.2 NVMe SSD

$2,499

verbatim
Charge 'n' Drive Magnetic Car Charger

MPV-31861

$59

Qi2 Magnetic Wireless Car Charger, Smart cooling fan and semiconductor chilling plate

Brateck
Dual Monitors Pole-Mounted Gas Spring Monitor Arm

MABT-LDT48-C024

$189

Fit Most 17"-32" Monitors Up to 9kg per screen VESA 75x75/100x100

UBIQUITI
G5 Turret Ultra

NHU-G5-TURRET-ULTR-B

$189

Black, Ultra-compact, Tamper-resistant IK04, IP66 Weatherproof 2K HD PoE Camera, Long-range Night Vision

CYGNETT
HighPWR 27k mAh Laptop Power Bank 148W PD - Black

MPA-CY5381PBCHE

$199

148W PD - Black, Includes EVA Travel Case, Advanced LCD Digital Display, Travel-Ready, 2 Years Warranty

UBIQUITI
G2 Touch

NHU-UTP-TOUCH-B

$439

Seamless integration with License free UniFi Talk PBX, Control Doors and Surveillance, right from your VoIP Handset

Visit www.leader-online.com.au to find your local Leader Reseller

LEADER

AI Companion Copilot+ PC 6C2

SCU6-C2-U732H

- 16” QHD+ Display
- Intel® Core™ Ultra 7 Processor 258V
- Intel® Arc™ Graphics 140V
- 1.42kg
- Wi-Fi 6E
- Windows 11 Home
- **Upgrade to Windows 11 Pro for $99**

Copilot+PC

Windows 11

16”	U7	32GB	1TB	$2,799
QHD+	258V	DDR5	M.2 NVMe SSD	

LEADER Companion SCE5-H1

SCE5-H1-C4P

$499

- Intel® Celeron® Processor N4020
- Intel® UHD Graphics 600
- Intel Wi-Fi AC
- 2.0MP HD Camera
- Windows 11 Pro

15.6”	Intel® Celeron®	4GB	128GB
Full HD IPS		DDR4	M.2 NVMe SSD

LEADER Companion SCE5-H1

SCE5-H1-C8P

$599

- Intel® Celeron® Processor N4020
- Intel® UHD Graphics 600
- Intel Wi-Fi AC
- 2.0MP HD Camera
- Windows 11 Pro

15.6”	Intel® Celeron®	8GB	500GB
Full HD IPS		DDR4	M.2 NVMe SSD

LEADER Companion 5N1

SCP5-N1-I5H

$1,099

- Intel® Core™ i5-12450H Processor
- Intel® Graphics
- Intel® Wi-Fi 6
- Windows 11 Home
- **Upgrade to Windows 11 Pro for $99**

15.6”	i5	16GB	500GB
Full HD IPS	12450H	DDR4	NVMe SSD

LEADER Companion 5N1

SCP5-N1-I7H

$1,399

- Intel® Core™ i7-13620H Processor
- Intel® Graphics
- Intel® Wi-Fi 6
- Windows 11 Home
- **Upgrade to Windows 11 Pro for $99**

15.6”	i7	16GB	500GB
Full HD IPS	13620H	DDR4	NVMe SSD

LEADER AI Companion Ultimate PC 5C1

SCP5-C1-I516H

$1,449

- Intel® Core™ i5-1335U Processor
- Intel® Iris® Xe Graphics
- Intel Dual Band Wi-Fi 6
- Windows 11 Home
- **Upgrade to Windows 11 Pro for $99**

15.6”	i5	16GB	500GB
Full HD	1335U	DDR4	NVMe SSD

LEADER Companion Plus 5C1 Notebook

SCP5-C1-I7H

$1,599

- Intel® Core™ i7-1355U Processor
- Intel® Iris® Xe Graphics
- Intel Dual Band Wi-Fi 6
- 1.0M HD Camera
- Windows 11 Pro

15.6”	i7	16GB	500GB
Full HD	1355U	DDR4	NVMe SSD

LEADER Copilot+PC AI Companion Copilot+ PC 6C1

SCP6-C1-A5H

$1,899

- AMD Ryzen AI 5 340 Processor
- AMD Radeon™ Graphics
- Intel® Wi-Fi 6E
- Windows 11 Home
- **Upgrade to Windows 11 Pro for $99**

16”	A5	16GB	1TB
Full HD+	340	DDR5	NVMe SSD

LEADER Copilot+PC AI Companion Copilot+ PC 6C1

SCP6-C1-A7H

$2,049

- AMD Ryzen AI 7 350 Processor
- AMD Radeon™ Graphics
- Intel® Wi-Fi 6E
- Windows 11 Home
- **Upgrade to Windows 11 Pro for $99**

16”	A7	16GB	1TB
Full HD+	350	DDR5	NVMe SSD

LEADER Copilot+PC AI Companion Copilot+ PC 6C1

SCP6-C1-A9H

$2,299

- AMD Ryzen AI 9 HX 370 Processor
- AMD Radeon™ Graphics
- Intel® Wi-Fi 6E
- Windows 11 Home
- **Upgrade to Windows 11 Pro for $99**

16”	A9	16GB	1TB
Full HD+	HX 370	DDR5	NVMe SSD

LEADER AI Companion Ultimate PC 6C1

SCU6-C1-U5H

$2,199

- Intel® Core™ Ultra 5 125U Processor
- Intel® AI NPU
- Ultralight, only 1.4kg
- Windows 11 Home
- **Upgrade to Windows 11 Pro for $99**

16”	U5	16GB	1TB
QHD+	125U	DDR5	NVMe SSD

LEADER Copilot+PC AI Companion Copilot+ PC 6C2

SCU6-C2-U516H

$2,499

- Intel® Core™ Ultra 5 Processor 226V
- Intel® AI NPU
- Intel® Arc™ Graphics 130V
- Ultralight, only 1.4kg
- Windows 11 Home
- **Upgrade to Windows 11 Pro for $99**

16”	U5	16GB	1TB
QHD+	226V	DDR5	NVMe SSD

LEADER AI Companion Ultimate PC 6C1

SCU6-C1-U7H

$2,599

- Intel® Core™ Ultra U7-155U Processor
- Intel® AI NPU
- Ultralight, only 1.4kg
- Windows 11 Home
- **Upgrade to Windows 11 Pro for $99**

16”	U7	16GB	1TB
QHD+	155U	DDR5	NVMe SSD

LEADER Copilot+PC AI Companion Copilot+ PC 6C1

SCP6-C1-A7GP

New!

$2,999

- AMD Ryzen AI 7 350 Processor
- RTX™ RTX5060 8GB
- Intel® Wi-Fi 7
- Windows 11 Home
- **Upgrade to Windows 11 Pro for $99**

16”	A7	32GB	1TB
QHD	350	DDR5	NVMe SSD

LEADER

2-in-1 Tablet 10W5PRO

TBL-10W5PRO

Experience premium portability with the ultimate productivity and entertainment device. Perfect for both personal and professional use.

- 10.5" Full HD IPS Multi-Touch Display
- Intel® Celeron® Processor
- Protective Case with Adjustable Stand
- Fingerprint Reader
- Detachable Keyboard
- Windows Ink Pen Included
- Windows 11 Professional

intel. CELERON

intel. Intel® UHD Graphics

Windows 11

10.5”	4GB	128GB	1 Year
Full HD IPS Touch	DRR4	eMMC	Australian Wide Onsite Warranty

$549

LEADER Breeze 4B2 Notebook

SCE4-B2-C4H

$449

- 14” Full HD Display
- Intel® Celeron® Processor
- Fingerprint Reader
- Windows 11 Home S
- M365 Personal 1 Year Subscription

14”	4GB	128GB	1 Year
Full HD	DDR4	eMMC	Warranty

LEADER Breeze 4B2 Notebook

SCE4-B2-C4P

$499

- 14” Full HD Display
- Intel® Celeron® Processor
- Fingerprint Reader
- Windows 11 Pro

14”	4GB	128GB	1 Year
Full HD	DDR4	eMMC	Warranty

LEADER Companion 4C1 Notebook

SCP4-C1-I5H

$1,399

- Intel® Core™ 5 120U Processor
- Intel® Graphics
- Intel Dual Band Wi-Fi 6E
- Windows 11 Home
- **Upgrade to Windows 11 Pro for $99**

14”	Core 5	16GB	500GB
Full HD	120U	DDR4	NVMe SSD

LEADER Companion 4C3 Notebook

SCP4-C3-I5321TBH

$1,499

- Intel® Core™ 5 120U Processor
- Intel® Graphics
- Intel Dual Band Wi-Fi 6E
- Windows 11 Home
- **Upgrade to Windows 11 Pro for $99**

14”	Core 5	32GB	1TB
Full HD	120U	DDR4	NVMe SSD

LEADER Companion 4C1 Notebook

SCP4-C1-I7H

- Intel® Core™ 7 150U Processor
- Intel® Graphics
- Intel Dual Band Wi-Fi 6E
- Windows 11 Home
- **Upgrade to Windows 11 Pro for $99**

$1,599

14”	Core 7	16GB	500GB
Full HD	150U	DDR4	NVMe SSD

LEADER Companion 4C3 Notebook

SCP4-C3-I7641TBH

- Intel® Core™ 7 150U Processor
- Intel® Graphics
- Intel Dual Band Wi-Fi 6E
- Windows 11 Home
- **Upgrade to Windows 11 Pro for $99**

$1,899

14”	Core 7	64GB	1TB
Full HD	150U	DDR4	NVMe SSD

LEADER Copilot+PC AI Companion Copilot+ PC 4C2

SCP4-C2-A5H

- AMD Ryzen AI 5 340 Processor
- AMD Radeon™ Graphics
- Intel Dual Band Wi-Fi 6E
- Windows 11 Home
- **Upgrade to Windows 11 Pro for $99**

$1,799

14”	A5	16GB	1TB
Full HD	340	DDR5	NVMe SSD

LEADER Copilot+PC AI Companion Copilot+ PC 4C2

SCP4-C2-A7H

$1,999

- AMD Ryzen AI 7 350 Processor
- AMD Radeon™ Graphics
- Intel Dual Band Wi-Fi 6E
- Windows 11 Home
- **Upgrade to Windows 11 Pro for $99**

14”	A7	16GB	1TB
Full HD	350	DDR5	NVMe SSD

LEADER Copilot+PC AI Companion Copilot+ PC 4C2

SCP4-C2-A9H

$2,199

- AMD Ryzen™ AI 9 HX 370 Processor
- AMD Radeon™ Graphics
- Intel Dual Band Wi-Fi 6E
- Windows 11 Home
- **Upgrade to Windows 11 Pro for $99**

14”	A9	16GB	1TB
Full HD	HX 370	DDR5	NVMe SSD

LEADER Copilot+PC AI Companion Copilot+ PC 4C1

SCU4-C1-U516P

$2,799

- Intel® Core™ Ultra 5 226V Processor
- Intel® Graphics 130V
- Ultralight, only 1.1kg
- Windows 11 Home

14”	U5	16GB	1TB
Full HD+	226V	DDR5	NVMe SSD

LEADER Copilot+PC AI Companion Copilot+ PC 4C1

SCU4-C1-U732P

$3,099

- Intel® Core™ Ultra 7 258V Processor
- Intel® Graphics 140V
- Ultralight, only 1.1kg
- Windows 11 Home

14”	U7	32GB	1TB
Full HD+	258V	DDR5	NVMe SSD

May-Day

Don't lose your $20,000 instant asset write-off*
Upgrade to Windows 11 Pro Now

5% OFF ANY LENOVO MONITOR with any of Lenovo Notebook

Lenovo ThinkPad X1 Yoga 14”

NBL-X1YG-U7321TBTLG9

- 14" WUXGA Touch Display
- Intel® Core™ AI PC Ultra 7 155U
- Windows® 11 Pro, English
- Integrated Intel® Graphics
- Backlit Keyboard
- Fingerprint Reader
- Weight 1.3 kg
- 3 Years Onsite Warranty

Thunderbolt 4 Connectivity | Touch Screen | Fingerprint Sensor | 4G LTE

intel core ULTRA 7 | intel graphics | Windows 11

14”	U7	32GB	1TB
WUXGA Touch	155U	DDR5	SSD

$3,499

5% OFF ANY LENOVO MONITOR WITH ANY OF LENOVO NOTEBOOK

Lenovo ThinkBook 14 G6

NBL-14-R716512G6

- 14” WUXGA Touch Display
- AMD Ryzen™ 7 7730U
- AMD Radeon™ Graphics
- Windows® 11 Pro
- Fingerprint
- Weight 1.38 kg
- 1 Year Onsite Warranty

Thunderbolt 4 Connectivity | Fingerprint Sensor

$1,099

14”	R7	16GB	512GB
WUXGA	7730U	DDR5	SSD

5% OFF ANY LENOVO MONITOR WITH ANY OF LENOVO NOTEBOOK

Lenovo ThinkBook 16 G8

NBL-16-I516512G8

- 16” WUXGA Display
- Intel® Core™ 5 210H
- Intel® Graphics
- Windows® 11 Pro
- Fingerprint
- Weight 1.7 kg
- 1 Year Onsite Warranty

Thunderbolt 4 Connectivity | Fingerprint Sensor

$1,249

16”	Core 5	16GB	512GB
WUXGA	210H	DDR5	SSD

5% OFF ANY LENOVO MONITOR WITH ANY OF LENOVO NOTEBOOK

Lenovo ThinkBook 14 G8

NBL-14-I732512G8

- 14" WUXGA Display
- Intel® Core™ 7 240H
- Intel® Graphics
- Windows® 11 Pro
- Fingerprint
- Weight 1.3 kg
- 1 Year Onsite Warranty

Thunderbolt 4 Connectivity | Fingerprint Sensor

$1,449

14”	Core 7	32GB	512GB
WUXGA	240H	DDR5	SSD

5% OFF ANY LENOVO MONITOR WITH ANY OF LENOVO NOTEBOOK

Lenovo ThinkBook 16 G8

NBL-16-I716512G8

- 16” WUXGA Display
- Intel® Core™ 7 240H
- Intel® Graphics
- Windows® 11 Pro
- Weight 1.7 kg
- 1 Year Onsite Warranty

Thunderbolt 4 Connectivity | Fingerprint Sensor

$1,499

16”	Core 7	16GB	512GB
WUXGA	240H	DDR5	SSD

5% OFF ANY LENOVO MONITOR WITH ANY OF LENOVO NOTEBOOK

Lenovo ThinkBook 14 Yoga G5

NBL-14Y-U516512G5

- 14" WUXGA Touch Display
- Intel® Core™ Ultra 5 225U
- Integrated Intel® Graphics
- Windows® 11 Pro
- Weight 1.6 kg
- Pen Included
- 1 Year Onsite Warranty

Fingerprint Sensor | Touch Screen

$1,599

14”	U5	16GB	512GB
WUXGA	225U	DDR5	SSD

5% OFF ANY LENOVO MONITOR WITH ANY OF LENOVO NOTEBOOK

Lenovo ThinkBook 14 Yoga G5

NBL-14Y-U732512G5

- 14" WUXGA Touch Display
- Intel® Core™ Ultra 7 155U
- Integrated Intel® Graphics
- Windows® 11 Pro
- Weight 1.6 kg
- Pen Included
- 1 Year Onsite Warranty

Fingerprint Sensor | Touch Screen

$1,949

14”	U7	32GB	512GB
WUXGA	155U	DDR5	SSD

5% OFF ANY LENOVO MONITOR WITH ANY OF LENOVO NOTEBOOK

Lenovo ThinkPad T14

NBL-T14-U516512TG5

- 14” WUXGA Touch IR Display
- Intel® Core™ Ultra 5 125U
- Intel® Graphics
- Windows® 11 Pro
- Weight 1.4 kg
- 3 Years Premier Onsite Warranty

Thunderbolt 4 Connectivity | Fingerprint Sensor | Touch Screen

$2,299

14”	U5	16GB	512GB
WUXGA Touch	125U	DDR5	SSD

5% OFF ANY LENOVO MONITOR WITH ANY OF LENOVO NOTEBOOK

Lenovo ThinkPad T14

NBL-T14-U716512G5

- 14” WUXGA Display IR Webcam
- Intel® Core™ Ultra 7 155U
- Intel® Graphics
- Windows® 11 Pro
- Weight 1.4 kg
- 3 Years Premier Onsite Warranty

Thunderbolt 4 Connectivity

$2,499

14”	U7	16GB	512GB
WUXGA Touch	155U	DDR5	SSD

5% OFF ANY LENOVO MONITOR WITH ANY OF LENOVO NOTEBOOK

Lenovo ThinkPad X1 Carbon

NBL-X1CB-U716512TLG1

- 14” WUXGA Touch Display IR Webcam
- Intel® Core™ Ultra 7 155U
- Integrated Intel® Graphics
- Windows® 11 Pro
- Weight 1 kg
- 3 Years Premier Onsite Warranty

Thunderbolt 4 Connectivity | Fingerprint Sensor | Touch Screen

$2,999

14”	U7	16GB	512GB
WUXGA	155U	DDR5	SSD

May-Day

Don't lose your $20,000 instant asset write-off*
Upgrade to Windows 11 Pro Now

5% OFF ANY HP MONITOR with any of HP Notebook

ZBook Power G11 16

NBHP-ZBPW-U7321TBR2KG11

- 16" WQXGA Touch Display
- Intel® Core™ Ultra U7-155H
- NVIDIA RTX™ 2000
- Windows® 11 Pro
- Fingerprint Sensor
- Weight 2.1 kg
- 3 Years Onsite Warranty

Thunderbolt 4 Connectivity | Touch Screen | Fingerprint Sensor

16"	U7	32GB	1TB
WQXGA	155H	DDR5	SSD

$3,399

intel CORE ULTRA 7 | NVIDIA GEFORCE RTX | Windows 11

5% OFF ANY HP MONITOR WITH ANY OF HP NOTEBOOK

ProBook 440 G11

NBHP-440-U516512G11

- 14" WUXGA Display
- Intel® Core™ Ultra 5 125U
- Windows® 11 Pro
- Weight 1.3 kg
- 1 Year Onsite Warranty

Fingerprint Sensor

$1,299

14"	U5	16GB	512GB
WUXGA	125U	DDR5	SSD

5% OFF ANY HP MONITOR WITH ANY OF HP NOTEBOOK

EliteBook 640 G10

NBHP-640-I516512G103

- 14" Full HD Display
- Intel® Core™ i5-1335U
- Intel® Iris® Xe Graphics
- Windows® 11 Pro
- Weight 1.3 kg
- 1 Year Onsite Warranty

Fingerprint Sensor

$1,399

14"	i5	16GB	512GB
Full HD	1335U	DDR4	SSD

5% OFF ANY HP MONITOR WITH ANY OF HP NOTEBOOK

ProBook 460 G11

NBHP-460-U516512TLG11

- 16" WUXGA Touch Display
- Intel® Core™ Ultra 5 125U
- Windows® 11 Pro
- Weight 1.7 kg
- 1 Year Onsite Warranty

Fingerprint Sensor | 4G LTE | Touch Screen

$1,599

16"	U5	16GB	512GB
WUXGA Touch	125U	DDR5	SSD

5% OFF ANY HP MONITOR WITH ANY OF HP NOTEBOOK

ProBook 440 G11

NBHP-440-U716512LG11

- 14" WUXGA Display
- Intel® Core™ Ultra 7 155U
- Windows® 11 Pro
- Weight 1.3 kg
- 1 Year Onsite Warranty

Fingerprint Sensor | 4G LTE

$1,699

14"	U7	16GB	512GB
WUXGA	155U	DDR5	SSD

5% OFF ANY HP MONITOR WITH ANY OF HP NOTEBOOK

ProBook 460 G11

NBHP-460-U716512LG11

- 16" WUXGA Display
- Intel® Core™ Ultra 7 155U
- Windows® 11 Pro
- Weight 1.7 kg
- 3 Years Onsite Warranty

Fingerprint Sensor | 4G LTE

$1,749

16"	U7	16GB	512GB
WUXGA	155U	DDR5	SSD

5% OFF ANY HP MONITOR WITH ANY OF HP NOTEBOOK

ZBook FireFly G11

NBHP-ZBFF-U51651A5

- 14" WUXGA Display
- Intel® Core™ Ultra 5 125H
- NVIDIA RTX™ A500
- Windows® 11 Pro
- Weight 1.4 kg
- 3 Years Onsite Warranty

Thunderbolt 4 Connectivity | Fingerprint Sensor

$1,899

14"	U5	16GB	512GB
WUXGA	125H	DDR5	SSD

5% OFF ANY HP MONITOR WITH ANY OF HP NOTEBOOK

EliteBook 660 G11

NBHP-660-U516512LG11

- 16" WUXGA IR
- Intel® Core™ Ultra 5 125U
- Windows® 11 Pro
- Weight 1.4 kg
- Pen Included
- 3 Years Onsite Warranty

Thunderbolt 4 Connectivity | Fingerprint Sensor | 4G LTE

$2,049

16"	U5	16GB	512GB
WUXGA IR	125U	DDR5	SSD

5% OFF ANY HP MONITOR WITH ANY OF HP NOTEBOOK

EliteBook 640 G11

NBHP-640-U716512LG11

- 14" WUXGA Display
- Intel® Core™ Ultra 7 155U
- Windows® 11 Pro
- Weight 1.3 kg
- 3 Years Onsite Warranty

Thunderbolt 4 Connectivity | Fingerprint Sensor | 4G LTE

$2,099

14"	U7	16GB	512GB
WUXGA	155U	DDR5	SSD

5% OFF ANY HP MONITOR WITH ANY OF HP NOTEBOOK

EliteBook 840 G11

NBHP-840-U716512LG11

- 14" WUXGA IR
- Intel® Core™ Ultra 7 155U
- Windows® 11 Pro
- Weight 1.4 kg
- 3 Years Onsite Warranty

Thunderbolt 4 Connectivity | Fingerprint Sensor | 4G LTE

$2,199

14"	U7	16GB	512GB
WUXGA IR	155U	DDR5	SSD

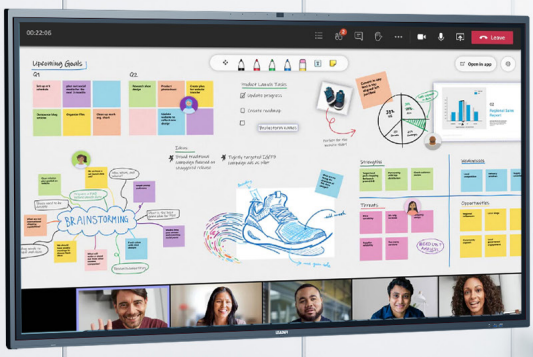

LEADER

86" Discovery Interactive Touch Display

MNIP-LE-86PV71

Revolutionize your presentations and classrooms with the Leader Discovery Interactive Whiteboard - an intuitive and collaborative tool that engages audiences with its advanced touch technology and versatile features.

- 4K Ultra HD Display
- Webcam and Microphone
- Android OS
- 32 Point Multi-Touch
- OPS Compatible
- Screen Mirroring
- 2 Pens Included
- Wi-Fi and Bluetooth
- VESA Mount
- 1 Year Onsite Warranty

4K

$7,999

LEADER PC Stick SC8-PRO

SC8-PRO

- Intel® N4020 Processor
- 4GB LPDDR4 RAM
- 128GB On Board Storage
- Wi-Fi AC + Bluetooth
- Windows 11 Pro
- 1 Year Leader Care Warranty

intel CELERON | Windows 11

HDMI Connect

$349

LEADER Mini PC SN4PRO-V6

SN4PRO-V6

- Intel® J4125 Processor
- 4GB LPDDR4 RAM
- 128GB On Board Storage
- Wi-Fi AC + Bluetooth
- VESA
- Windows 11 Pro
- 1 Year Australia Wide Oniste Warranty

intel CELERON | Windows 11

VESA Mount

$399

LEADER OPS for Leader Interactive Whiteboards MNE-OPS-IDL05

- Intel® Core™ i5-1235U Processor
- Intel® Iris® Xe Graphics
- 500GB M.2 NVMe SSD + 8GB DDR4
- Wi-Fi 6
- Windows 11 Pro
- 1 Year Onsite Warranty

intel iRIS Xe GRAPHICS | intel CORE i5 | Windows 11

$1,699

LEADER Corporate Slim Desktop / Windows 11 Pro

Take your business to the next level with the Leader Corporate PC - offering exceptional performance, advanced security features, and a 3-year "4 hour" warranty for unmatched reliability and support.

- Gold 80+ 500W PSU
- 24/7 Stability and Reliability
- Fully Customisable
- Windows 11 Pro

Customisable

SS45-i5 Intel® Core™ i5 -14400 Processor	intel CORE i5	Windows 11	i5 14400	16GB DDR5	500GB M.2 NVMe SSD	$1,599
SS45-I5161TB Intel® Core™ i5 -14400 Processor	intel CORE i5	Windows 11	i5 14400	16GB DDR5	1TB M.2 NVMe SSD	$1,699
SS45-I7 Intel® Core™ i7-14700 Processor	intel CORE i7	Windows 11	i7 14700	16GB DDR5	500GB M.2 NVMe SSD	$1,999
SS45-i7321TB Intel® Core™ i7-14700 Processor	intel CORE i7	Windows 11	i7 14700	32GB DDR5	1TB M.2 NVMe SSD	$2,399

LEADER

Corporate N15-i5 mini-PC

SN15-I516

intel CORE i5 | Windows 11

3 YEARS | VESA Mount

$1,499

Intel i5-13500H, 16GB DDR5 RAM, 500GB M.2 NVMe SSD, Wi-Fi 6E, 2.5G LAN, Win 11 Pro, 3 Year "4 Hour" Onsite Warranty

LEADER

Corporate N15-i5 mini-PC

SN15-I5161TB

intel CORE i5 | Windows 11

3 YEARS | VESA Mount

$1,599

Intel i5-13500H, 16GB DDR5 RAM, 1TB M.2 NVMe SSD, Wi-Fi 6E, 2.5G LAN, Win 11 Pro, 3 Year "4 Hour" Onsite Warranty

LEADER

Corporate N15-i7 mini-PC

SN15-I7

intel CORE i7 | Windows 11

3 YEARS | VESA Mount

$1,699

Intel i7-13700H, 16GB DDR5 RAM, 500GB M.2 NVMe SSD, Wi-Fi 6E, 2.5G LAN, Win 11 Pro, 3 Year "4 Hour" Onsite Warranty

LEADER

Corporate N15-i7 mini-PC

SN15-I7321TB

intel CORE i7 | Windows 11

3 YEARS | VESA Mount

$1,899

Intel i7-13700H, 32GB DDR5 RAM, 1TB M.2 NVMe SSD, Wi-Fi 6E, 2.5G LAN, Win 11 Pro, 3 Year "4 Hour" Onsite Warranty

LEADER

Corporate N16-U5 Copilot+ AI mini-PC

SN16-U5

Intel Ultra 5 226V, 16GB DDR5, 1TB NVMe SSD, Wi-Fi 7, 2.5G LAN, Win 11 Pro, 3 Yr "4 Hour" Onsite Warranty

New!

intel CORE ULTRA 5 | Windows 11

3 YEARS

$2,199

LEADER

Corporate N16-U7 Copilot+ AI mini-PC

SN16-U7

Intel Ultra 7 258V, 32GB DDR5, 1TB NVMe SSD, Wi-Fi 7, 2.5G LAN, Win 11 Pro, 3 Yr "4 Hour" Onsite Warranty

New!

intel CORE ULTRA 7 | Windows 11

3 YEARS

$2,399

LEADER

Corporate N16-U9 Copilot+ AI mini-PC

SN16-U9

Intel Ultra 9 288V, 32GB DDR5, 2TB NVMe SSD, Wi-Fi 7, 2.5G LAN, Win 11 Pro, 3 Yr "4 Hour" Onsite Warranty

New!

intel CORE ULTRA 9 | Windows 11

3 YEARS

$2,999

LEADER Visionary All-In-One PC

Experience top-notch performance and style with the Leader All in One PC - featuring a stunning 24" display, ultra-thin bezel design, and built-in webcam

- Slim Bezel Display
- Height Adjustable Stand
- Pop-up Camera
- Windows 11 Home
- **Upgrade to Windows 11 Pro for $99**

Windows 11 | VESA Mount | WiFi 6 CERTIFIED

SV274-I5H
27" Full HD

i5	16GB	1TB	$1,449
12450H	DDR4	NVMe SSD	

SV244-I5H
23.8" Full HD

i5	16GB	1TB	$1,349
12450H	DDR4	M.2 NVMe SSD	

SV274-I7H
27" Full HD

i7	16GB	1TB	$1,649
12650H	DDR4	NVMe SSD	

LEADER Visionary Desktop

- Tower Case with Tempered Glass Panel
- 1 Year Australia Wide Onsite Warranty

Windows 11 | Customisable

Visionary 326
SV326

- Intel® Core i3-14100 CPU
- Intel® UHD Graphic 730
- B760 Chipset

i3	16GB	500GB	$1,199
14100	DDR5	M.2 NVMe SSD	

Visionary 562
SV562

- Intel® Core i5-14400 CPU
- Intel® UHD Graphic 730
- B760 Chipset

i5	16GB	1TB	$1,399
14400	DDR5	M.2 NVMe SSD	

Visionary 775
SV775

- Intel® Core i7-14700 CPU
- Intel® UHD Graphic 770
- B760 Chipset

i7	16GB	1TB	$1,799
14700	DDR5	M.2 NVMe SSD	

Lenovo Tower Server

ThinkSystem ST45 V3

SVL-ST45V3-7DH5A01AAU

- AMD EPYC™ 4344 processor, up to 12 cores at 65W
- Faster TruDDR5 5200MHz ECC-UDIMM
- Onboard 2x SATA connector
- 5350-8i RAID card for 3x 3.5" HDD, small (17L) tower form factor single socket

AMD EPYC

Starting at

$2,209

Optimized 8-core Functionality Lenovo

ThinkSystem ST50 V3

SVL-ST50V3-7DF3A00BAU

- Intel® Xeon® E-2478 processor, up to 8 cores at 80W
- Faster TruDDR5 4400MHz
- 3x 3.5" HDD bays, 2.5" HDD bay
- Small (17L) tower form factor single socket server
- Lenovo XClarity Controller

Lenovo XClarity | Intel Xeon

$3,849

Lenovo

Windows Server 2025 Essentials ROK (10 core)
SVL-7S1S000XWW

$1,029

Lenovo

Windows Server 2025 Standard ROK (16 core)
SVL-7S1S0009WW

$2,529

Lenovo

Windows Server 2025 Datacenter ROK (16 core)
SVL-7S1S000JWW

$12,159

Lenovo

ThinkSystem ST250 V3

SVL-ST250V3-7DCEA013

- 1 x Intel Xeon E-2478 8C 80W
- 4x UDIMM slots 16GB
- PCIe 4.0 and PCIe 5.0 adapters
- 800W HS
- XCC Enterprise

Configure from

$4,599

Intel Xeon | Lenovo XClarity

Lenovo

ThinkSystem ST650 V3

SVL-ST650V3-7D7AA037AU

- 1x Intel Xeon Silver 4514Y
- 16C 2.0GHz 150W, SSF
- 1x 32GB, 2R x 8
- ThinkSystem RAID 9350-8i
- 2GB Flash PCIe 12Gb Adapter

Configure from

$10,189

Intel Xeon Silver | Lenovo XClarity

Lenovo

ThinkSystem SR250 V3
SVL-SR250V3-7DCLA00X

Intel Xeon | Lenovo XClarity

$4,699

1x Intel Xeon E-2488 8C 3.2GHz 95W SFF, 1x 16GB DDR5, SW RD, 1x800W, XClarity Controller 2

Lenovo

ThinkSystem SR630 V3
SVL-SR630V3-7D73A04EAU

Intel Xeon Silver | Lenovo XClarity

$7,949

Intel Xeon Silver 4510 12C 150W 2.4GHz Processor Option Kit w/o Fan (Standard), ThinkSystem RAID 9350-8i

Lenovo

ThinkSystem SR645 V3
SVL-SR645V3-7D9CA01J

AMD EPYC | Lenovo XClarity

$8,049

1xAMD EPYC SP5 GENOA 9124 16C 2.6-2.7GHz 200W 200W, SFF, 1x16GB 1Rx8, ThinkSystem RAID 5350-8i PCIe 12Gb Internal Adapter

Lenovo

ThinkSystem SR650 V3
SVL-SR650V3-7D76A05NAU

Intel Xeon | Lenovo XClarity

$8,389

Intel Xeon Silver 4510 12C 150W 2.4GHz Processor Option Kit w/o Fan(Standard), ThinkSystem RAID 9350-8i

Connect Display

NHU-UC-DISPLAY

21.5” Full HD PoE++ touchscreen designed for interactive digital signage applications, single PoE++ device for presenting media content, web pages, and Android apps.

- Ultra-Bright 21.5” Touch Display
- Media Content Playback
- Interactive Web Browsing
- Android App Support
- Multiple Mounting Options
- PoE++ Input

$1,429

UniFi Compact Bundle

NHU-COMPACT-BUNDLE

$579

- Integrated 1TB SSD
- Full UniFi App Suite Support (Network, Protect, Access, Talk, Connect)
- Bundle includes UXG-LITE 1Gbps Gateway/Firewall
- Bluetooth for instant setup via App

Ubiquiti + Netool Lite Network Essentials Bundle

NHU-NETOOL-LITE-BUNDLE

$909

- Integrated 1TB SSD
- Full UniFi App Suite Support (Network, Protect, Access, Talk, Connect)
- Bundle includes UXG-LITE 1Gbps Gateway/Firewall
- Bluetooth for instant setup via App
- Bundle includes NETOOL Lite portable diagnostic dongle

Ubiquiti + Netool Pro Network Essentials Bundle

NHU-NETOOL-PRO-BUNDLE

$989

- Integrated 1TB SSD
- Full UniFi App Suite Support (Network, Protect, Access, Talk, Connect)
- Bundle includes UXG-LITE 1Gbps Gateway/Firewall
- Bluetooth for instant setup via App
- Bundle includes NETOOL PRO portable diagnostic dongle

G5 Turret Ultra

Black, Ultra-compact, Tamper-resistant IK04, IP66 Weatherproof 2K HD PoE Camera, Long-range Night Vision

NHU-G5-TURRET-ULTR-B

$189

G5 PTZ

White, Compact, Weatherproof 2K HD, IP66, Remote Pan-tilt-zoom Control, Automatic Person Tracking

NHU-UVC-G5-PTZ

$599

G5 Pro

IR Night Vision, 4K Resolution, 3x Optical Zoom, Intergrated microphone, PoE, Weatherproof

NHU-UVC-G5-PRO

$849

AI Pro

Indoor/Outdoor 4K PoE Camera, Black, Waterproof IP65, PoE+ Power, Max Power 11W, GbE RJ45 Port, License Plate Recognition, Facial recognition

NHU-UVC-AI-PRO

$1,069

Mobile Router Industrial

Compact & Ruggedized LTE Cat 4 Mobile WiFi Router Designed For Indoor/Outdoor IoT Applications

NHU-UMR-INDUSTRIAL

$399

G2 Touch

Seamless integration with License free UniFi Talk PBX, Setup a fully featured office phone system in just minutes, Control Doors and Surveillance, right from your VoIP Handset

NHU-UTP-TOUCH-B

$439

PowerAmp

Premium Speaker Amplifier Designed For High-fidelity Multi-zone Audio Streaming & Immersive Spatial Sound Experiences

- NHU-UPL-AMP-B
- NHU-UPL-AMP-W

$1,349

ViewSonic
See the difference™

Foldable All-in-One LED Display 138”

LDS138-151

138” foldable LED display offers quick 10-minute setup, easy transport, impact and dust protection, clean cable management, powerful audio, and seamless visuals—perfect for boardrooms, receptions, galleries, and large venues.

Easy Transport & Setup

Great Audiovisual Impression

User-Friendly Operation

$99,999

ViewSonic
See the difference™

Genesis Series 65” 4K OS-Free Interactive Display

65” 4K OS-Free Interactive Display BYOD interactive display Upgradable framework Seamless USB-C Flexible integration

IPV-IFP65G1

$2,999

ViewSonic
See the difference™

Genesis Series 75” 4K OS-Free Interactive Display

75” 4K OS-Free Interactive Display BYOD Upgradable framework Seamless USB-C Flexible integration

IPV-IFP75G1

$4,399

ViewSonic
See the difference™

Genesis Series 86” 4K OS-Free Interactive Display

4K OS-Free Interactive Display, BYOD, Upgradable framework, USB-C plug-and-play Flexible integration with slot-in PCs

IPV-IFP86G1

$5,499

ViewSonic
See the difference™

ViewBoard 65” 4K Interactive Display

Android 14, EDLA, 65”, Touch Point Windows: 40, Android: 20, EDLA: 20 Android 14 Certified ViewBoard 65” 4K Interactive Display

IPV-IFP6534

$5,169

ViewSonic
See the difference™

ViewBoard 75” 4K Interactive Display

EDLA Certified ViewBoard 75” 4K Interactive Display, 20% better power efficiency, Android 14 Quad-core CPU & microSD port

IPV-IFP7534

$6,709

ViewSonic
See the difference™

ViewBoard 86” 4K Interactive Display

EDLA Certified ViewBoard 86” 4K Interactive Display, 20% better power efficiency, Android 14 Quad-core CPU & microSD port

IPV-IFP8634

$9,569

ViewSonic
See the difference™

65” 4K Presentation Display - CN6501-1C

IPV-CN6501-1C

4K Ultra HD clarity and flexible Presentation Display, 24/7 non-stop playback, USB-C port, Intuitive signage player brightness

$2,089

ViewSonic
See the difference™

75” 4K Presentation Display - CN6501-1C

IPV-CN7501-1C

4K Ultra HD clarity and flexible Presentation Display, 24/7 non-stop playback, USB-C port, Intuitive signage player, brightness

$3,189

APC

Back-UPS Pro Gaming UPS - White

UPA-BGM2200

Introducing APC Back-UPS Pro Gaming. Power protection for your gaming gear.

- 2200VA/1320W
- Tower
- 230V
- 6x Australian outlets
- RGB Lights
- Pure Sine Wave

$779

APC

Back-UPS 700VA/405W Power-Saving UPS

UPAPCBE700-AZ

$289

Desk Top, 230V/10A Input, 8x Aus Outlets, Lead Acid Battery, User Replaceable Battery

APC

OffGrid Portable Solar Panel 100W

UPAPC-PSP100

$609

Solar energy is a reliable and versatile way of recharging your power station, both at home or in off-grid situations.

APC

OffGrid Portable Solar Panel 200W

UPAPC-PSP200

$919

Solar energy is a reliable and versatile way of recharging your power station, both at home or in off-grid situations.

APC

OffGrid Portable Power Station 330

UPAPC-PPS330-AZ

$879

120V, 332Wh Lithium-ion, LCD, 2 NEMA, Sinewave, 3 USB-A, 1 USB-C, Wireless Charger

APC

OffGrid Portable Power Station 500

UPAPC-PPS500-AZ

$1,479

120V, 517Wh Lithium-ion, LCD, 3 NEMA, Sinewave, 3 USB-A, 2 USB-C, Wireless Charger

APC

OffGrid Portable Power Station 730

UPAPC-PPS730-AZ

$1,749

700W, 120V, 738Wh Lithium-ion, LCD, 3 NEMA, Sinewave, 3 USB-A, 2 USB-C, Wireless Charger

DEEPCOOL

CG530 4F ATX Case

CAD-CG530-4F

$159

Tempered Glass, 4 Pre-Instaled Fans, USB3.0×2 Gen2 Type-C x1 Audio/Mic×1, Cable, Supports Rear Connector

DEEPCOOL

CH260 M-ATX Case

CAD-CH260

$119

Extremely Portable Size, Abundant Airflow Ventilation, Mesh and glass panels, Support up to 360mm liquid cooling, Direct installation

CPU COOLERS

DEEPCOOL

AK400 Digital Pro Performance CPU Cooler

CFD-AK400-DIG-PRO

$109

4 Heat Pipe Tower, High-Performance FDB Fan, Multi-data Point Screen, Intel LGA1851/1700/1200 AM4/5

DEEPCOOL

AK620 Digital Pro High Performance Dual Tower CPU Cooler

CFD-AK620-DIG-PRO

$179

6 Copper Heat Pipes, Dual FT12 SE FDB PWM Fan, IntelLGA2066/2011-v3/2011/1851/170

WATER COOLING

DEEPCOOL

LE360 V2 Liquid Cooler

CFD-LE360-V2

$149

360 mm 6th Gen Pump up to 3400 PWM, Hydro Bearing, Intel LGA1851/1700/1200/1151/1150/1155, AMDAM5/AM4

DEEPCOOL

LM360 Liquid Cooler

CFD-LM360

$199

ARGB Liquid Cooler Mini LCD Screen, 2.4" IPS, 320×240 Resolution , Intel LGA1851/1700/1200 + More, AMD AM5/AM4

PSU

GAMER STORM

PN750M Gamer Storm 80+ Gold ATX Power Supply

PSD-PN750M-GS

$149

80+ Gold Certified Fully Modular ATX Power Supply 120mm Fan, Japanese Capacitors, DC to DC, ATX12V V3.1,

GAMER STORM

PN850M Gamer Storm 80+ Gold 850W ATX Power Supply

PSD-PN850M-GS

$169

850W 80+ Gold Certified Fully Modular ATX Power Supply, 120mm Fan, Japanese Capacitors, DCtoDC, ATX12V V3.1, 100,000 MTB

GeForceRTX 5000 Series - Game Changer!

Powered by NVIDIA Blackwell, GeForce RTXTM 50 Series GPUs bring game-changing capabilities to gamers and creators. Equipped with a massive level of AI horsepower, the RTX 50 Series enables new experiences and next-level graphics fidelity

INNO3D

GeForce RTX 5080 X3 OC White

VCI-RTX5080-X3O-W

- 16GB GDDR7
- 2640MHz Boost Clock
- 30Gbps RAM
- 3x DP
- 1xHDMI
- 300x120x50mm

$2,579

NVIDIA GEFORCE RTX Powering Advanced AI

INNO3D

GeForce RTX 5090 X3 OC

VCI-RTX5090-X3O

- 32GB GDDR7
- 2452MHz Boost Clock
- RAM 28 Gbps
- 3x DP
- 1xHDMI
- 333x137x60mm (3-slot)

NVIDIA GEFORCE RTX Powering Advanced AI

$5,499

INNO3D

GeForce RTX 5060 TWIN X2

VCI-RTX5060-TWX2

GEFORCE RTX Powering Advanced AI

$599

8GB GDDR7 2497MHz Boost Clock, RAM 28Gbps, 3xDP, 1xHDMI

INNO3D

GeForce RTX 5060 Ti TWIN X2

VCI-RTX5060TI-TWX216

GEFORCE RTX Powering Advanced AI

$889

16GB GDDR7, 2572MHz Boost Clock, RAM 28Gbps, 3xDP, 1xHDMI

INNO3D

GeForce RTX 5070 TWIN X2 OC White

VCI-RTX5070-X2OW

GEFORCE RTX Powering Advanced AI

$1,239

12GB GDDR7 2512 MHz Boost Clock, RAM 28 Gbps, 3x DP, 1xHDMI 250x116x41mm

INNO3D

GeForce RTX 5070 TI X3 OC

VCI-RTX5070TI-X3O

GEFORCE RTX Powering Advanced AI

$1,779

16GB GDDR7 2482 MHz Boost Clock, RAM 28 Gbps, 3x DP, 1xHDMI 300x116x41mm

INNO3D

GeForce RTX 5070 TI X3 OC White

VCI-RTX5070TI-X3O-W

GEFORCE RTX Powering Advanced AI

$1,829

16GB GDDR7 2482 MHz Boost Clock, RAM 28 Gbps, 3x DP, 1xHDMI 300x116x41mm

RESISTANCE

Striker R55-15 V1 Gaming Notebook

SRS-R55-15V1

- Intel® Core™ i7-14650HX Processor
- NVIDIA® Geforce RTX™ 5050 8GB GDDR6
- Intel® Wi-Fi 7 Connectivity
- Multi Colour Backlit Keyboard
- Windows 11 Home

15.6” Full HD	i7 14650HX
16GB DDR5	1TB M.2 NVMe SSD

$2,499

RESISTANCE

Apache V42 Essential Gaming PC

SRAV42-E

$1,799

Customisable

- Intel® Core™ i3-14100 Processor
- RTX 3050 8GB
- Wi-Fi 6
- Built-in display
- Windows 11 Home
- Free Game Pass Ultimate 1 month Subscription

i3 14100	16GB DDR4	500GB M.2 NVMe SSD	3 Year RTB Warranty

FAST

RESISTANCE

Apache V42 Plus Gaming PC

SRAV42-P

$3,999

Customisable

- Intel® Core™ i5-14600 Processor
- RTX 5070 12GB
- Wi-Fi 6
- Built-in display
- Windows 11 Home
- Free Game Pass Ultimate 1 month Subscription

i5 14600	32GB DDR5	1TB M.2 NVMe SSD	3 Year RTB Warranty

FASTER

RESISTANCE

Apache V42 Ultimate Gaming PC

SRAV42-U

$5,999

Customisable

- Intel® Core™ Ultra 7 Processor 265KF
- RTX 5080 16GB
- Wi-Fi 7
- Built-in display
- Windows 11 Home
- Free Game Pass Ultimate 1 month Subscription

U7 265KF	64GB DDR5	2TB M.2 NVMe SSD	3 Year RTB Warranty

FASTEST

Omada by tp-link

Best Sellers

SG2428P Omada 28-Port Gigabit Smart Switch

NWTL-SG2428P

$499

- 250 W PoE Budget
- 24× gigabit PoE+ ports and 4× gigabit SFP Slots
- Integrated into Omada SDN
- Cloud access and Omada app for easy management
- Helps route internal traffic
- Robust Security Strategies
- Optimize Voice and Video Applications
- IPv6 support with dual IPv4/ IPv6 stack, MLD snooping

SG3452P Omada 52-Port Gigabit L2+ Managed Switch

NWTL-SG3452P

$1,049

- 48× Gigabit 802.3af/at PoE+ ports and 4× Gigabit SFP slots
- 384 W total PoE budget with up to 30 W PoE output per port*
- Centralized cloud managementvia web or app
- Helps route internal traffic
- VLAN, ACL, QoS, and IGMP Snooping
- Optimize Voice and Video Applications
- ERPS supports rapid protection and recovery

SG3452XP Omada 48-Port Gigabit and 4-Port 10GE SFP+ L2+ Managed Switch

NWTL-SG3452XP

$1,349

- 48× Gigabit 802.3af/at PoE+ ports
- 4× 10 Gbps SFP+ slots
- 500 W total PoE budget with up to 30 W PoE output per port*
- Centralized cloud managementvia web or app
- Helps route internal traffic
- VLAN, ACL, QoS, and IGMP Snooping
- Optimize Voice and Video Applications
- ERPS supports rapid protection and recovery

Latest Modem Routers

tp-link

Archer VX1800v Modem Router

NWTL-ARCHERVX1800V

AX1800 Dual-Band Wi-Fi 6 VDSL Modem Router With VoIP, 574 Mbps at 2.4 GHz 1201 Mbps at 5 GHz

$239

Omada by tp-link

DR3650v Omada Gateway

NWTL-DR3650V

AX3000 Wi-Fi 6 Gigabit Desktop DSL Gateway, 574Mbps @ 2.4GHz + 2402Mbps @ 5GHz (HE160), VDSL2 35b 350/60, VoIP

$399

Omada by tp-link

DR3650v 4G Omada Gateway

NWTL-DR3650V-4G

4G+ Cat6 AX3000 Wi-Fi 6 Gigabit Desktop DSL Gateway, 574Mbps @ 2.4GHz + 2402Mbps @ 5GHz(HE160), VDSL2 350 350/60, VoIP

$629

Latest VPN Routers

Omada by tp-link

TL-ER7206 Omada Gigabit VPN Router

NWTL-ER7206

$209

Gigabit Multi-WAN VPN Router, 5× GE RJ45 ports; 1× GE SFP slot; Load Balancing on up to 5× WAN ports

Omada by tp-link

ER7212PC Omada 3-in-1 Gigabit VPN Router

NWTL-ER7212PC

$309

Integrates Router, POE+ Output & Omada Mgt. Control up to 10 EAPs. VPN, 4 WAN Ports, 110W Budget

Omada by tp-link

ER706W-4G Omada 4G+ Cat6 AX3000 Gigabit VPN Router

NWTL-ER706W-4G

$519

4G+, Dual Band Wi-fi 6, 6 Gigabit Ports (5 RJ45+1 SFP), 5 High-Gain Detach Antennas, Omada Mesh, High-Security VPN

Omada by tp-link

ER706WP-4G Omada 4G+ Cat6 AX3000 Gigabit VPN Gateway with 4-Port PoE+

NWTL-ER706WP-4G

$549

4G+ Cat6 AX3000 Gigabit VPN Gateway with 4-Port PoE+, 574Mbps at 2.4 GHz + 2402 Mbps at 5 GHz (HE160) Wi-Fi Speed, 300 Mbps

Latest Wi-Fi 6 Access Points

Omada by tp-link

EAP655-Wall Omada AX3000 Wall Plate WiFi 6 Access Point

NWTL-EAP655-WALL

4 Gigabit ports, 574Mbps at 2.4 GHz + 2402 Mbps at 5 GHz, 2× Internal Antennas

$149

Omada by tp-link

EAP650-Desktop Omada AX3000 Desktop Wi-Fi 6 Access Point

NWTL-EAP650-DESKTOP

4× Gigabit RJ45 (One supports PoE out), 1× RJ11 574Mbps at 2.4 GHz + 2402 Mbps at 5 GHz, 4×Internal Antennas, MU-MIMO

$199

Omada by tp-link

EAP650-Outdoor Omada Access Point

NWTL-EAP650-OUTDOOR

AX3000 Indoor/Outdoor WiFi 6 Access Point, 574Mbps at 2.4 GHz + 2402 Mbps at 5 GHz, IP67

$239

Omada by tp-link

EAP650 D120 - Outdoor AX3000 Indoor/Outdoor WiFi 6 Access Point

NWTL-EAP650-D120-Outdoor

2402 Mbps on 5 GHz and 574 Mbps on 2.4 GHz, IP68 waterproof enclosure with -30°C to +70°C operating range, 802.11k/v/r Seamless Roaming, Directional Antennas for ultra-range coverage

$289

verbatim

Pocket SSD USB 3.2 Gen 2

Pocket-sized SSD with USB-C connection 3.2 Gen 2 interface, USB 3.2 Gen 2 interface – data transfer speeds up to 10Gbps, ultra lightweight and small enough to slip into your back pocket, convenient keyring and cable holder keeps your cable neat and tangle-free.

1TB – $189

- HXV-1TBBKGR
- HXV-1TBBKRD
- HXV-1TBBKOG

2TB – $349

- HXV-2TBBKBL

verbatim

External Slimline Mobile CD/DVD Writer

4K OS-Free Interactive Display, BYOD, Upgradable framework, USB-C plug-and-play Flexible integration with slot-in PCs

CMV98938 – $99

verbatim

M-Disc BDXL 100GB 5Pk Jewel Case 6x

Impervious to environmental exposure, including light, temperature and humidity, withstood rigorous testing for durability

CMV98913 – $159

verbatim

External Slim Blue-ray Writer

Ultra HD 4K Type-C Connection, USB 3.1 Gen1, Includes Nero Burning Software, Ultra Portable, New 2024

USV-43888 – $289

verbatim

DVD+R 4.7GB 5Pk Jewel Case 16x

16x 5 Pack with Jewel Cases, 120 Minutes of write-once storage capacity, superior recording quality, and compatibility with 1X to 16X DVD+R writers

CMVD95049 – $9

verbatim

Classic Headset with USB-C

Audio Headphone Mic Classic Type C - Black, Clear Sound, Comfort, Robust Construction, Easy modern connection, Headset Office & School 2025

SPV-67031 – $29

verbatim

128GB Type-C USB 3.2 Flash Drive

Black Retail Pack 70903 Ultra Fast Transfer, Compact and Light weight design

USV-70905 – $49

verbatim

Charge 'n' Drive Magnetic Car Charger

Qi2 Magnetic Wireless Car Charger, Smart cooling fan and semiconductor chilling plate

MPV-31861 – $59

verbatim

3 Port 65 Watt Portable GaN charger

2 x USB-C PD 65w, 1x USB-A QC 3.0, GNC-65A Compact Design for most phone brands

MPV-67016 – $59

verbatim

USB-C Pro Multiport Hub 13 Port

2 x HDMI, 1 x DisplayPort, 1 x RJ45, 3 x USB-A 3.2 Gen 1, 1 x USB-A 3.2 Gen 2, 2 x USB-A 2.0, 1 x Audio

USV-32153 – $189

verbatim

4K Wireless USB-C Dongle

Share My Screen Mirror Image. Compact and Ultra Portable. Windows, Linux Mac 10.2 support

NAV-32147 – $199

verbatim

15.6" Business Ultra Portable IOS Monitor

15.6" IPS USB-C Touch Full HD 1920 x 1080, 10 Point Touch, - Tilt, Speaker, Earphone, VESA 50mm x 50mm

MNV-49592 – $419

ViewSonic
See the difference™

34” UWQHD 180Hz Curved Gaming Monitor

MNV-VX3418C-2K

$629

1500R | 2K UWQHD | 180Hz | 1ms | HDR10 | Eye ProTech

34” Curved 3440x1440, 180Hz 1ms 1500R, HDR10, Adaptive Sync, 2x HDMI, 2x DP, Speaker, VESA 100, VX3418-2KPC Office Gaming Ultra Wide Monitor

ViewSonic
See the difference™

24” Full HD Ergonomic Docking Monitor with USB-C Hub

MNV-VG2409U-2

65w, USB 3.2 Hub, 100hz, HDMI, DP, Ergonomics Height Adjust, Swivel, Pivot, Advanced Replacement Warranty

$499

ViewSonic
See the difference™

32” IPS QHD Entertainment Monitor

MNV-VX3276-2K-MHD-2

2K QHD (2560 x 1440) Business Professional Ultra Thin Stylish, Elegant, SuperClear IPS, low energy 36w, 3 year warranty

$569

ViewSonic
See the difference™

27” QHD Ergonomic Monitor with USB-C and Dual Speakers

MNV-VG2708U-2K

2K 2560 X 1440 SuperClear IPS, USB-C 65w Hub, DP, Height Adjust, 3y Advance Replacement, Business Pro Monitor

$599

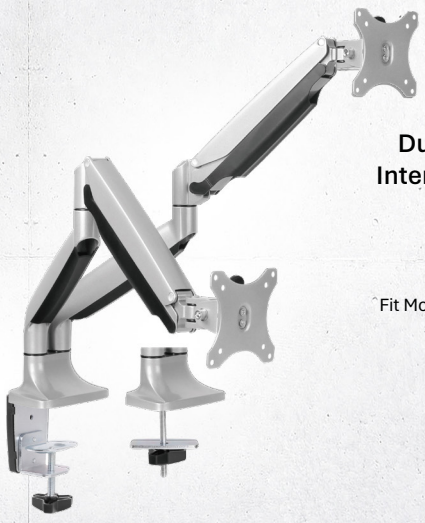

Brateck

Dual Monitor Aluminum Interactive Counterbalance Monitor Arm

MABT-LDT10-C024

Fit Most 13”-32” Monitors Up to 9kg per screen VESA 75x75/100x100

$229

Brateck

Dual Monitors Aluminum Heavy-Duty Gas Spring Monitor Arm with Handle

MABT-LDT23-C022

Fit Most 17‘-32’ Monitors Up to 8kg per screen VESA 75x75/100x100

$279

Brateck

Dual Monitors Affordable Steel Articulating Monitor Arm

Fit Most 17”-31” Monitors Up to 9kg per screen VESA 75x75/100x100

$139

MABT-LDT33-C024

Brateck

Economy Dual-Screen Spring-Assisted Monitor Arm

Fit Most 17”-32” Monitor Up to 9 kg VESA 75x75/100x100 (LS)

MABT-LDT13-C024E

$169

Brateck

Dual Monitor Full Extension Gas Spring Dual Monitor Arm (Independent Arms)

Fit Most 17”-32” Monitors Up to 8kg per screen

MABT-LDT16-C024

$219

MICROSOFT

Microsoft
Windows 11 Home
SMSWIN11HOME64

$249

OEM 64-bit English 1 Pack DVD. Key only NEW

Microsoft
Windows 11 Home
SMS-WIN11HRET-USB

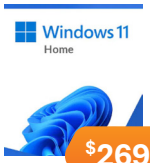

$269

Retail 64-bit USB Flash Drive (HAJ-00090)

Microsoft
Windows 11 Pro
SMSWIN11PROEM64

$359

OEM 64-bit English 1 Pack DVD. Key NEW

Microsoft
Windows 11 Pro
SMS-WIN11PRORET-USB

$419

Retail 64-bit USB Flash Drive

Upgrade your experience with the best Windows yet.

Boost your potential with Microsoft 365

Get productivity apps, security, and storage with Microsoft 365. Then add AI power with Copilot Pro.

Microsoft 365
Microsoft 365 Personal 2023
SMS-M365P-1YRML-23

$149

English APAC 1 Year Subscription Medialess NEW for PC & Mac.

Microsoft 365
Office Home & Student 2024
SMS-OFHS2024-ML-1U

$249

APAC DM Mediates versions of Word, Excel, and Powerpoint for PC & Mac

Microsoft 365
Office Home & Business 2024
SMS-OFFHB2024-ML

$439

English APAC Medialess Retail - Word, Excel, Power Point, Outlook for PC and Mac

Microsoft ESD

Microsoft
ESD - Project Standard 2024
CSP-ESD-PROJECTS24

Suitable for individual users and small teams, and provides essential project management tools.

Available on Leader Cloud, Keys available instantly

$1,159

Microsoft
ESD - Project Pro 2024
CSP-ESD-PROJECTPRO24

Improve project selection and on-time delivery. Manage your projects more efficiently with the right timelines, budgets, and resources.

Available on Leader Cloud, Keys available instantly

$2,099

Microsoft
ESD - Windows 11 Home
CSP-ESD-WIN11H

$249

64-bit All Language Available on Leader Cloud, Keys available instantly

Microsoft
Microsoft ESD - Microsoft Office 365 Business Standard
CSP-ESD-O365BPR

$289

Available on Leader Cloud, Keys available instantly

Microsoft
ESD - Windows 11 Pro
CSP-ESD-WIN11P

$359

(ESD) Electronic License throu CSP - No Refund. (Available through Leader Cloud)

Microsoft
ESD - Office Home and Business 2024
CSP-ESD-OHB2024

$399

All Language APAC, Available on Leader Cloud, Keys delivery via email

Microsoft
ESD - Visio Standard 2024
CSP-ESD-VISIOS24

$589

All language, Available on Leader Cloud, Keys available instantly

AOC

27” 260Hz Gaming Monitor

MNAO-Q27G42ZE

$499

260Hz 0.3ms ADAPTIVE SYNC HDR10 HIGH DYNAMIC RANGE

260Hz 2560 × 1440 (QHD) Fast IPS, 0.3ms, HDR10, HDMI 2.0 × 2 Display Port 1.4 × 1 Adaptive Sync Gaming Monitor

AOC

27” 120Hz IPS Monitor

MNAO-27B36H3

120Hz 1920 × 1080 (FHD), 300 cd/m2, VGA × 1, HDMI 1.4 × 1 1ms AdaptiveSync IPS Monitor. Office and Home 2025

$249

AOC

23.8” IPS Panel Monitor

MNAO-24B3CA3

1920 × 1080 FHD, 120Hz, 1ms, 4ms, Anti-Blue Light, USB-C (DP Alt, 65W) × 1, HDMI 1.4 ×1.2 W x 2 Speakers IPS Monitor

$299

AOC

27” 4K 3840x2160 (UHD) Monitor

MNAO-U27B35

IPS 60Hz, 4ms, HDR10, Low Blue Mode, HDMI 2.0 × 2, DisplayPort 1.4 × 1, Office and Home Monitor

$449

Brateck

Single Heavy-Duty Gaming Monitor Arm

MABT-LDT61-C012-BG

Fit Most 17”-49” Monitor Up to 20KG, Fit Curved Monitor, VESA 75x75,100x100 (LS)

$219

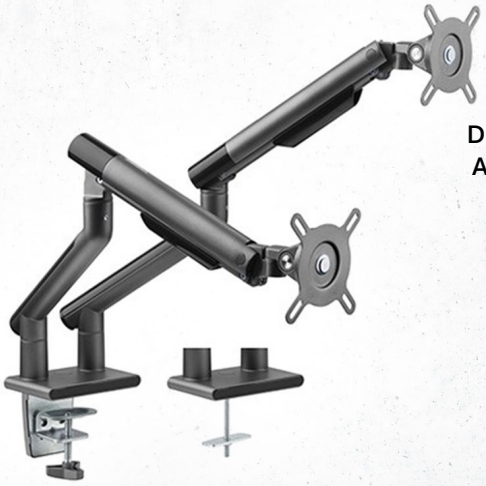

Brateck

Dual Monitor Premium Slim Aluminum Spring-Assisted Monitor Arm

MABT-LDT49-C024-B

Fix Most 17”-32” Monitor Up to 9kg per screen VESA 75x75/100x100 (Space Grey)

$279

Brateck

Single Monitor Premium Slim Aluminum Spring-Assisted Monitor Arm

Fix Most 17”-32” Monitor Up to 9kg per screen VESA 75x75/100x100

MABT-LDT49-C012-B

$169

Brateck

Dual Monitors Pole-Mounted Gas Spring Monitor Arm

Fit Most 17”-32” Monitors Up to 9kg per screen VESA 75x75/100x100

MABT-LDT48-C024

$189

Brateck

Premium Aluminum Articulating Monitor Stand

Fit Most 17”-32” Monitor Weight Capacity Up to 8KG VESA 75x75,100x100 (LS)

MABT-LDT72-T024

$189

brother
at your side

Industrial Label Printer, 203dpi

TJ4020TN

A desktop barcode label printer that produces 203dpi labels at up to 10ips‡. Push the boundaries of what you can accomplish with refreshingly easy integration designed to drop-in and a complete set of connectivity choices.

$1,599

brother
at your side

RuggedJet 4" Mobile Label & Receipt Printer + Wireless & Bluetooth RJ-4250WB

Comes with P-Touch Editor - Label creation Software. Rugged, reliable, ready for work. For busy mobile workers who need a durable and reliable 4 inch mobile label/receipt printer with USB, wireless and Bluetooth connectivity.

$1,099

brother
at your side

4.3" Desktop Network Thermal Transfer Printer, 203dpi

TD4420TN

- 4" Desktop Network Thermal Transfer/ Direct Thermal Printer - 203dpi
- USB, Host USB, Serial & Ethernet LAN Connectivity
- Versatile Design, Easy to Integrate

$749

brother
at your side

4.3" Desktop Network Direct Thermal Printer, 203dpi

TD4420DN

- 4" Desktop Network Thermal Label, Tag and Receipt Printer
- USB, Serial & Ethernet LAN Connectivity
- Ergonomic Design and Easy to Use

$749

brother
at your side

4.2" Desktop Network Thermal Printer - TT, 203dpi

TD4650TNWB

- 4" Desktop Network Thermal Transfer Thermal Printer - 203dpi
- USB, Host USB, Serial, Ethernet LAN, V WLAN & Bluetooth® MFi Connectivity
- Versatile Design, Easy to Integrate

$1,099

brother
at your side

4.2" Desktop Network Thermal Transfer Printer, 300dpi

TD4750TNWB

- 4" Desktop Network Thermal Transfer Thermal Printer - 300dpi
- USB, Host USB, Serial, Ethernet LAN, Wi-Fi® WLAN & Bluetooth® MFi Connectivity
- Versatile Design, Easy to Integrate

$1,199

***All Products come with FREE P-Touch Editor Label Creation Software**

32GB ROM
+ 3GB RAM

IQU SmartEasy T8w

IQU SmartEasy T8w Wi-Fi 32GB - Black (IQUT8WBLACK)

MD-IQUT8WBLACK

- 8” TFT Display (800*1280)
- Quad Core Processors
- 3,500 mAh Battery

$129

IQU SmartEasy T10w

IQU SmartEasy T10w Wi-FI 32GB - Black (IQUT10WBLACK)

MD-IQUT10WBLACK

- 10” TFT Display (800*1280)
- Octa-Core Processors
- 6,000 mAh Battery

$159

32GB ROM
+ 3GB RAM

2GB RAM +
16GB ROM

IQU SMARTEasy Q50

IQU SmartEasy Q50 4G 16GB - Black

MF-SMARTTALKQ50BLACK

- 5.5” crystal clear display
- Quad Core Processors
- 2,400 mAh Battery

$179

8K Single HDMI Display at up to 8K/30Hz

CYGNETT

UNITE

HighDock 13-in-1 USB-C Hub Adapter Dock

MPA-CY5149HUB14

revolutionises your workspace with 100W USB-C pass-through charging, powered by an included 134W power supply.

$399

100W USB-C PD pass-through port

2x USB-C 4.0 ports

4K Dual HDMI Display at up to 4K/60Hz

CYGNETT

GripStand

Heavy Duty Case for Samsung Galaxy Tab A9+ 11" - Black

MPA-CY5200CPGRP

Designed to withstand the harshest conditions

- 360° protection
- Apple pencil storage
- Rotating kickstand
- Built-in screen protector
- Includes adjustable shoulder strap
- 2 year warranty

$69

CYGNETT

MagKeyboard

Magnetic Wireless Keyboard Case for iPad 10th/11th Gen – Black

MPA-CY5331CKBCA

All round protection

- Connect wirelessly
- Backlit keys for easy typing
- 30 hours+ battery life
- Ergonomic design with integrated kickstand
- Recharge via USB-C input
- 2 year warranty

$179

CYGNETT

UNITE

8K HDMI to HDMI Cable (1.5M) - White

MPA-CY4864CYHDC

Best gaming, video streaming & home cinema experience

- Ultra-HD resolution (60Hz) & 4K (120Hz
- Braided cables cer latest HDMI standard
- 2-year warranty

$29

CYGNETT

POWERPLUS

45W USB-C PD GaN Fast Wall Charger - White

MPA-CY4738PDWCH

Provides super fast charging for Android phones

- 45W optimal charging for all phones, tablets & laptops
- Power Delivery 3.0
- 2-year warranty for reliability & safety

$49

CYGNETT

POWERMAXX

65W PD GaN Laptop Charger with Integrated USB-C Cable (1M) - Black

MPA-CY5071PDWCH

Charges laptops, phones & tablets

- 65W USB-C Power Delivery
- GaN technology
- Integrated 1M USB-C charging cable
- 2-year warranty

$79

CYGNETT

UNITE

3-in-1 USB-C to Triple HDMI Hub - Black

MPA-CY5392CYHUB_

Connect two external monitors to your device

- Triple 4K HDMI
- Supports MST Mode (Multi-Stream Transport Mode)
- USB-C DisplayPort and Thunderbolt compatible
- ABS outer shell

$99

CYGNETT

HIGHPWR

27k mAh Laptop Power Bank 148W PD - Black

MPA-CY5381PBCHE

Fast charge 3 devices

- 148W PD - Black
- Includes EVA Travel Case
- Advanced LCD Digital Display
- Travel- Ready
- 2 Years Warranty

$199

CYGNETT

MAGTRAVEL

15W 3-in-1 Wireless Charger - Black

MPA-CY4530WIRDE

Fast 3-in-1 wireless charging Apple Products

- Lightweight and portable
- Works best with 25W wall charger
- Includes 1m USB-C to USB-C cable

$199

LG

38” UltraWide™ QHD+ (3840x1600) Curved monitor

MNL-38WR85QC-W

$2,399

VESA CERTIFIED DisplayHDR 600 | 144Hz | IPS 1ms | MaxxAudio® | NVIDIA G-SYNC | AMD FreeSync Premium Pro

144Hz, IPS, 1ms, 2x USB Type-C (90w PD), HDR600 , HDMI, 4xUSB 3.0, RJ45, HAJ, Speakers, Professional Monitor

LG

24” Full HD IPS Monitor with USB Type-C™

MNL-24BA650-B

1920×1080 (16:9), USB-C, Height Adjustment Tilt Swivel Pivot VESA Display Port, HDMI, Speakers x 2, 3yrs Monitor

$399

LG

27” UHD 4k (16:9) IPS display Professional Monitor

MNL-27US550-W

4k 3840×2160 (16:9) IPS display HDR10 Height Adjustable, 3 side Borderless, LG Switch, Office and Professional White Monitor

$659

LG

27” UHD 4K IPS Monitor with VESA DisplayHDR™ 400

MNL-27UP850K-W

5ms 4K 3840×2160 (16:9) UHD HDR400 FreeSync, HDMI, DP, USB Type-C 96w, Speaker, VESA 100, Height Adjust, Business Monitor

$819

Brateck

Titan Heavey-Duty Gas Spring Monitor Arm with USB-A and USB-C Ports

MABT-LDT87-C012UC-B

Fit Most 24”-57” Monitor Up to 27KG, Fit Curved Monitor, VESA 75x75,100x100 (LS)

$249

Brateck

Super Heavy-Duty Gas Spring Monitor Arm with USB-A and USB-C Ports

MABT-LDT80-C012UC

For most 17”~57” Monitors, Matte Black, up to 27kg, VESA 75x75/100x100 (Matte Black)

$289

Brateck

Single Monitor Economical Spring-Assisted Monitor Arm

Fit Most 17”-32” Monitors, Up to 9kg per screen VESA 75x75/100x100 Matte Grey (LS)

MABT-LDT63-C012-S

$119

Brateck

Single Screen Heavy-Duty Gas Spring Monitor Arm with USB Ports

For most 17”~45” Monitors, Matte Black(LS)

MABT-LDT82-C012UC-BK

$169

Brateck

Pole-Mounted Heavy-Duty Gas Spring Monitor with Laptop Holder

For most 17”~49” Monitors, Fine Texture White (LS)

MABT-LDT81C012PML-W

$199

ExpertCenter P440 AiO

P440VAK-BPC479X

- 23.8" Full HD Display
- Intel® Core™ i5-13420H Processor
- Wired optical mouse & Keyboard (USB)
- Retractable camera
- Built-in array microphone
- Wi-Fi 6E
- Windows 11 Pro
- 3 Year Onsite Warranty

AI ExpertMeet: Smart transcription, translation & meeting summary

3 Year International Warranty for Business Reliability

16GB DDR5 | 512GB NVMe™ PCIe® SSD | $1,849

ExpertCenter D5 SFF

D501SERES-514500068X

- Intel® Core™ i5-14500 Processor
- B760
- 330W 80 + Platinum
- TPM, Card Reader
- Wi-Fi 6E
- Bluetooth
- Windows 11 Pro
- 3 Year Onsite Warranty

Enterprise-Grade Durability: No.1 motherboard with 100% solid capacitors& meeting summary

Revolutionary Tool-free Design

$1,899 | 16GB DDR5 | 512GB NVMe™ PCIe® SSD

ExpertBook BM1403CDA Notebook

NBA-BM1403CDA-R516512

- 14" Full HD Display
- AMD Ryzen™ 5 7535U Processor
- AMD Radeon™ Graphics
- Backlit Chiclet Keyboard
- 1080p Full HD camera
- Windows 11 Pro

Tailored BIOS, image & asset tag for seamless deployment | Military-grade durability for all-around reliability

$1,079 | 14" Full HD | 16GB DDR5 | 512GB NVMe SSD | 1 Year Onsite Warranty

ExpertBook BM1403CDA Notebook

NBA-BM1403CDA-R716512

- 14" Full HD Display
- AMD Ryzen™ 7 7735U Processor
- AMD Radeon™ Graphics
- Backlit Chiclet Keyboard
- 1080p Full HD camera
- Windows 11 Pro

Tailored BIOS, image & asset tag for seamless deployment | Military-grade durability for all-around reliability

$1,119 | 14" Full HD | 16GB DDR5 | 512GB NVMe SSD | 1 Year Onsite Warranty

ExpertBook P1403CVA Notebook

NBA-P1403CVA-I516512

- 14" Full HD Display
- Intel® Core™ i5-13420H Processor
- Intel® UHD Graphics
- Chiclet Keyboard
- 720p HD camera
- Windows 11 Pro

Tough. Reliable. All-day Power with 63 Wh battery

$1,499 | 14" Full HD | 16GB DDR5 | 512GB NVMe SSD | 1 Year Onsite Warranty

ExpertBook P1503CVA Notebook

NBA-P1503CVA-I516512

- 15.6" Full HD Display
- Intel® Core™ i5-13420H Processor
- Intel® UHD Graphics
- Chiclet Keyboard
- 720p HD camera
- Windows 11 Pro

Tough. Reliable. All-day Power with 63 Wh battery

$1,549 | 15.6" Full HD | 16GB DDR5 | 512GB NVMe SSD | 1 Year Onsite Warranty

ExpertBook B1403CVA Notebook

NBA-B1403CVA-I716512U

- 14" Full HD Display
- Intel® Core™ i7-1355U Processor
- Intel® UHD Graphics
- Chiclet Keyboard
- Windows 11 Pro

Tailored BIOS, image & asset tag for seamless deployment | Military-grade durability for all-around reliability

16GB DDR5 | 512GB NVMe SSD | 1 Year Onsite Warranty | $1,629

ExpertBook P1403CVA Notebook

NBA-P1403CVA-I716512

- 14" Full HD Display
- Intel® Core™ i7-13620H Processor
- Intel® UHD Graphics
- Chiclet Keyboard
- Windows 11 Pro

Tough. Reliable. All-day Power with 63 Wh battery

16GB DDR5 | 512GB NVMe SSD | 1 Year Onsite Warranty | $1,699

ExpertBook P1503CVA Notebook

NBA-P1503CVA-I716512

- 15.6" Full HD Display
- Intel® Core™ i7-13620H Processor
- Intel® UHD Graphics
- Chiclet Keyboard
- Windows 11 Pro

Tough. Reliable. All-day Power with 63 Wh battery

16GB DDR5 | 512GB NVMe SSD | 1 Year Onsite Warranty | $1,749

ExpertBook B3405CCA Notebook

B3405CCA-LY0752X

- 14" WUXGA Display
- Intel® Core™ U5 125H Processor
- Intel® UHD Graphics
- Spill-proof Chiclet Keyboard
- Windows 11 Pro

AI PC with Intel® Core™ Ultra & built-in NPU for smarter business performance | 16:10 display with 144Hz for smoother, more productive viewing

16GB DDR5 | 1TB NVMe SSD | 1 Year Onsite Warranty | $1,749

ExpertBook B3405CCA Notebook

B3405CCA-LY0753X

- 14" WUXGA Display
- Intel® Core™ U7 155H Processor
- Intel® UHD Graphics
- Spill-proof Chiclet Keyboard
- Windows 11 Pro

AI PC with Intel® Core™ Ultra & built-in NPU for smarter business performance | 16:10 display with 144Hz for smoother, more productive viewing

16GB DDR5 | 1TB NVMe SSD | 1 Year Onsite Warranty | $2,149

ExpertBook P5405CSA Notebook

NBA-P5405CSA-U7321TB

- 14" WQXGA Display
- Intel® Core™ Ultra 7 Processor 258V
- Intel AI Boost NPU
- Intel® Arc™ 140V
- Backlit Chiclet Keyboard
- Windows 11 Pro

Copilot+ PC with Intel® Lunar Lake for seamless work & AI tasks | Sleek 1.27kg aluminum body for premium portability

32GB DDR5 | 1TB NVMe SSD | 3 Year Onsite Warranty | $3,149

LEADER
PROUDLY AUSTRALIAN

JULY - SEPTEMBER 2025

TAKE ADVANTAGE - UPGRADE YOUR IT TODAY!

TAX RETURN DEALS

LEADER

PC Stick SC8-PRO

SC8-PRO

- Intel® Celeron® Processor N4020
- Wi-Fi AC
- Bluetooth 5.1
- 134x45x15mm, 86g
- Micro SD Card Reader
- Windows 11 Pro

Windows 11

$349

Celeron	4GB	128GB	1 Year
N4020	Memory	Storage	Warranty

LEADER

Companion SCE5-H1

SCE5-H1-C4P

- 15.6" Full HD IPS
- Intel® Celeron® Processor N4020
- Intel® UHD Graphics 600
- Wi-Fi AC
- 180° Hinge
- 2M Camera
- Windows 11 Pro

Windows 11

$499

15.6"	Celeron	4GB	128GB
Full HD IPS	N4020	DRR4	NVMe SSD

LEADER

27" Visionary AIO

SV274-I5H

- 27" Full HD (1920x1080) 16:9
- Slim Bezel Display
- Height Adjustable Stand
- Webcam 2.0MP Camera
- Windows 11 Home
- Upgrade to Windows 11 Pro for $99

Windows 11

$1,449

i5	16GB	1TB	1 Year
12450H	DDR4	M.2 NVMe SSD	Onsite Warranty

Shuttle

BPCAL03 Embedded Box PC i5U

SYS-BPCAL03

$1,949

- Intel® Core™ i5-1235U, vPro supportive
- 2x DDR5, 2x LAN, 3x COM, 8x USB
- Aluminum chassis, Fanless, -20~60°C
- 24/7 certified
- 3 year warranty

Shuttle

NE10N Nano Mini PC 0.5L Barebone

SYS-NE10N

$599

- Intel® N100
- DDR4, 6x USB, LAN, HDMI, DP
- Fanless, 65W, 0-40 Degree C, 24/7 certified
- 3 year warranty

Shuttle

DH610 Slim Mini PC 1L Barebone

SYS-DH610

$709

- Intel ® 14/13/12th Gen supportive
- 2x LAN, 1x HDMI, 2x DP
- 2x COM, 4x USB 3.2 Gen 1, 4x USB 2.0
- 24/7 certified
- 3 year warranty

Shuttle

SPCEL03 Edge IoT PC

SYS-SPCEL03

$909

- 120 x 75 x 51mm only
- Intel Atom x6413E, DDR4
- 1x HDMI, 2x LAN, 3x USB
- COM, DIO, 3-pin terminal block, -20-60 degree C
- 24/7 certified
- 3 year warranty

Shuttle

NA10H & NT10H Nano Mini PC 0.5 Barebone

SYS-NA10H & SYS-NT10H

$1,469 NA10H: AMD Ryen 7/9

$1,609 NT10H: Intel Core Ultra 5/7/9

- 2x DDR5, 8x USB, 2x LAN
- 2x HDMI, 2x DP
- 24/7 certified
- 3 year warranty

Shuttle

DN11H Slim Mini AI PC 1L Barebone

SYS-DN11H

$1,869

- Intel ® Meteor Lake Core Ultra 5/7/9
- 2x DDR5, 3x M.2 2280 (RAID)
- 2x HDMI, 2x DP
- 4x 2.5G LAN, 8x USB
- 24/7 certified
- 3 year warranty

Contact your local IT professional below. They are ready to help implement world leading IT solutions.

WHERE TO BUY?
SCAN ME

Offers and prices are available until 30/9/2025 or until stocks last. Details correct at time of printing. We reserve the right to correct errors/or misprints and to change product specifications. Stocks may vary from store to store. Delivery may be slightly longer in some country areas due to courier delays. Freight charges may apply in some country areas. Onsite Warranty only covers systems (excludes peripherals and software). 12-24 months return base warranty on notebooks, extended warranty available. 12 month warranty on batteries in notebooks and tablets. Prices may subject to change without notice. E&EO. Pictures are only for illustrative purposes. Supplied product may appear different. Actual colours may vary slightly to printed colour. Accessories are for display purposes only and are not included unless specifically nominated. All products are advertised in good faith and will be available except in circumstances beyond our control. Despite our careful planning, we apologise if selected items may sell out quickly due to unexpected high demand. Intel NUC's are barebone units only and require storage and memory to be added.

Visit www.leader-online.com.au to find your local Leader Reseller